252 Range

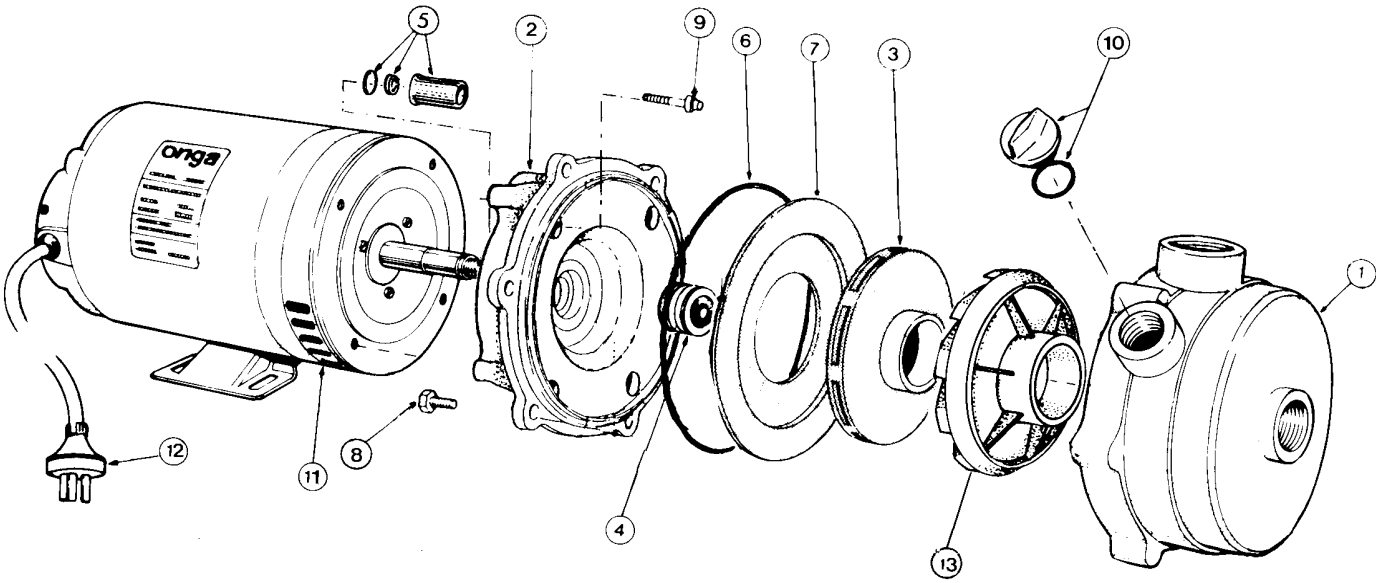

Drawings are indicative only, product appearance may change slightly.

Genuine Onga Spare Parts Supplied By:

ARGON DISTRIBUTORS LTD

Freephone 0508 634 341

7 Monier Pl, Mt Wellington, Auckland 1060, New Zealand

252 Range

MODEL	252
PART NUMBER	325210 (1PH)
	325230 (3PH)

REF NO.	COMPONENT DESCRIPTION	PART NO.	
1	CASING	400880GN	1PC
2	YOKE	402400GN	1PC
3	IMPELLER	506343	1PC
4	SEAL KIT (INC. 4 & 5)	800583K	1PC
5	SHAFT SLEEVE KIT	800895K	1PC
6	O-RING - CASING	700206K	1PC
7	BAFFLE	403233	1PC
8	SCREW (PK/10)	800097	1PC
9	BOLT & BOLT SEAL (PK/12)	800242K	1PC
10	PRIMING PLUG & O-RING	800017K	1PC
11	MOTOR - 1 PHASE	800445	1PC
	MOTOR - 3 PHASE	800447	1PC
12	LEAD	608200K	1PC
13	DIFFUSER	402810	1PC